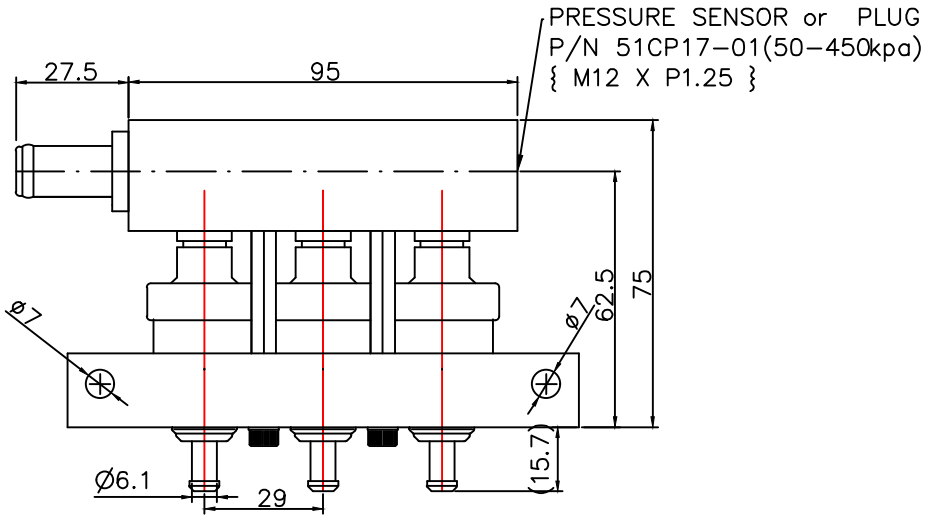
PRESSURE SENSOR or PLUG
P/N 51CP17-01(50-450kpa)
{ M12 X P1.25 }
27.5
95
ø7
ø7
62.5
75
(15.7)
Ø6.1
29

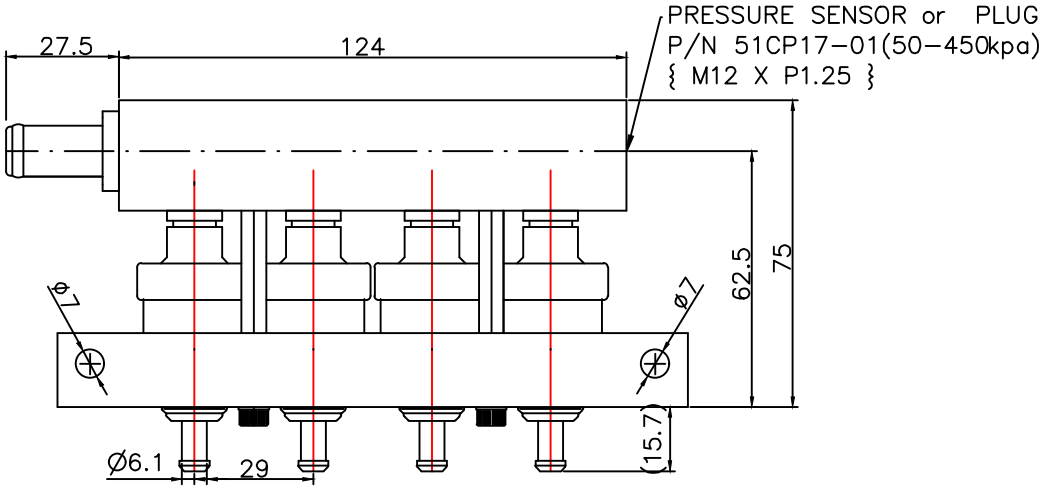
PRESSURE SENSOR or PLUG
P/N 51CP17-01(50-450kpa)
{ M12 X P1.25 }
27.5
124
ø7
ø7
62.5
75
(15.7)
Ø6.1
29