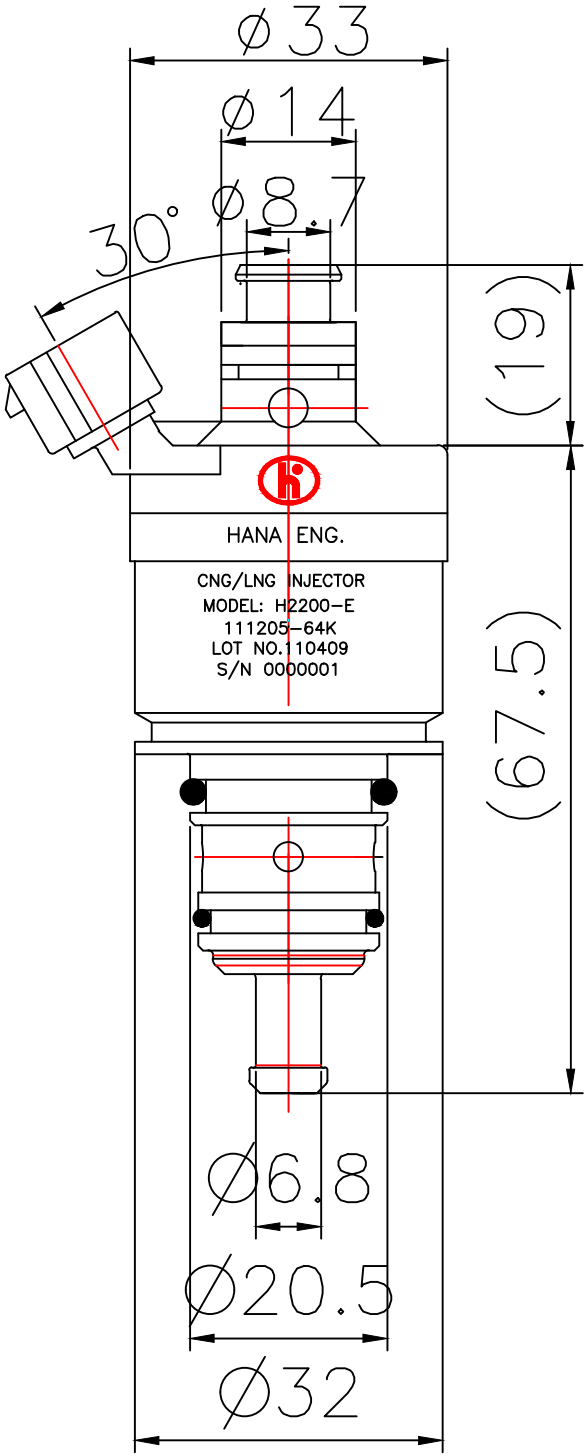
Ø33
Ø14
Ø8.7
30°
(19)
(67.5)
HANA ENG.
CNG/LNG INJECTOR
MODEL: H2200-E
111205-64K
LOT NO.110409
S/N 0000001
Ø6.8
Ø20.5
Ø32

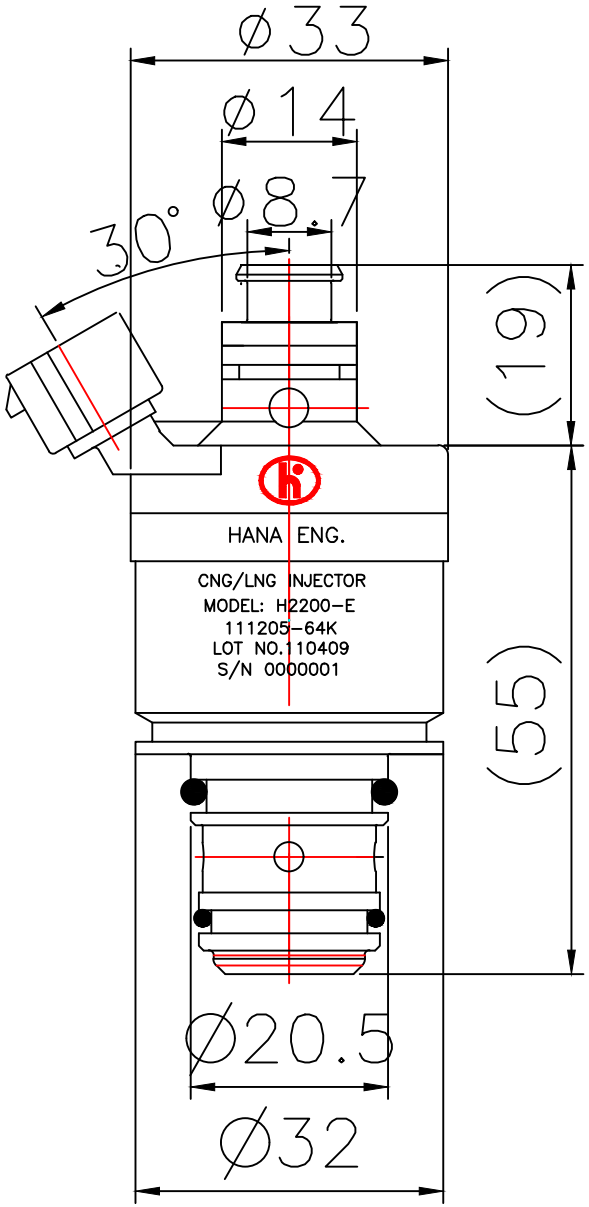
Ø33
Ø14
Ø8.7
30°
(19)
(55)
HANA ENG.
CNG/LNG INJECTOR
MODEL: H2200-E
111205-64K
LOT NO.110409
S/N 0000001
Ø20.5
Ø32